The Foundation
Sheridan Memorial Hospital

Post Office Box 391
Sheridan, Wyoming 82801
307.673.2418

www.sheridanhospital.org

Sheridan Memorial Hospital Foundation
Regular Board Meeting
Monday, February 24, 2025, 4:00 pm
Location: Sheridan Memorial Hospital
Cafeteria Conference Room C

1. Welcome and Call the Meeting to Order—Vice President Wendy Smith

2. Sheridan Memorial Hospital Introductions—Cody Sinclair
   a. Emma Groteluschen, SMH Surgical Services Manager

3. Sheridan Memorial Hospital Perspectives in Healthcare Presentation—Mike McCafferty, Chief Executive Officer

4. Philanthropic Topics
   a. Board Evaluation – How are we doing? What could we improve?—Wendy Smith

5. Consent Agenda (action)—Wendy Smith
   a. January 27, 2025 meeting minutes
   b. Checks, Transfers and Journal Entries for January 2025

6. Foundation Reports
   a. Roadmap Supporting SMH's Strategic Plan—Liz Dearcorn
   b. Donor Relations Update—Ada Kirven
      i. From Last Month: Peripheral Vascular Device System cost was equal to quote ($15,545), Emergency Department Carts ($23,774) was $1,776 over quote (action)
      ii. AccuVein AV500 (Vein Finder), $5,230 from Membership Funds (Page 30) (action)
      iii. Auxiliary Challenge: Mini C-arm, $43,950 from Unrestricted Funds (Page 30) (action)
   c. Community Coordination, Event/Volunteer Updates—Jasmine Slater

7. Reports
   a. SMH Board of Trustees Report—Richard Garber
   b. SMH Physicians—Dr. Josh Scott
   c. SMH Auxiliary—Rosemary Rieder

8. Other Business
   a. Next board meeting scheduled on Monday, March 24, 2025 at 4 pm

9. Adjournment

Sue Belish – *President* | Wendy Smith – *Vice President* | Yvonne Gatley – *Secretary* | Ryan Franklin – *Treasurer*
Mikole Bede Soto – *Director* | Chuck Burgess – *Director* | Gary Campbell – *Director* | William E. Doughty, MD – *Director*
Richard Garber – *Director* | Rosemary Rieder – *Director* | Joshua Scott, MD – *Director*

Cody Sinclair – *Chief Development Officer* | Ada Kirven – *Director of Donor Relations* | Liz Dearcorn – *Director of Philanthropy*

SHERIDAN MEMORIAL HOSPITAL

Strategic Framework
May 2023

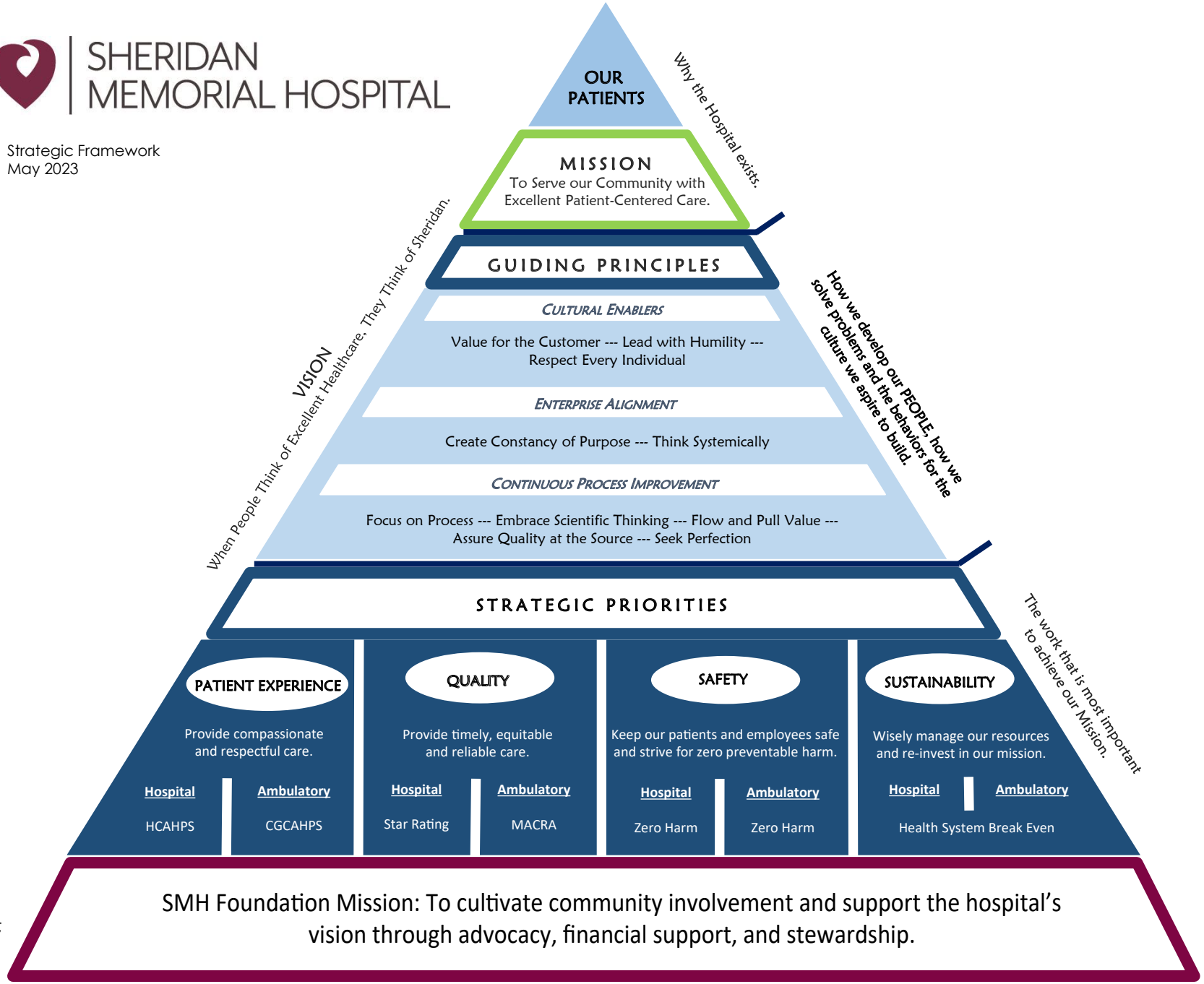

The Foundation
Sheridan Memorial Hospital

Sheridan Memorial Hospital Foundation
Regular Board Meeting
Monday, January 27, 2025 4:00 pm
Location: Sheridan Memorial Hospital
Cafeteria Conference Room C

PRESENT: Sue Belish, Mikole Bede Soto, Gary Campbell, Dr. William Doughty, Ryan Franklin, Richard Garber, Yvonne Gatley, Rosemary Rieder, Dr. Joshua Scott, Wendy Smith

GUESTS: Cody Sinclair, Ada Kirven, Jasmine Slater, Liz Dearcorn, Lauren Martinsen, Karen Boedeker, Dr. Michael Kinney, Brittany Goodvin, Chad Slyngstad, Alaina Bergstrom

ABSENT: Chuck Burgess

WELCOME:
President Sue Belish called the meeting to order at 4:00 pm and welcomed everyone. Gary Campbell shared a personal story that highlighted the hospital's mission of providing excellent, patient-centered care. He spoke of the wonderful, compassionate and respectful care that he received when he went to Same Day Health.

SHERIDAN MEMORIAL HOSPITAL
Cody Sinclair, Chief Development Officer, introduced Dr. Michael Kinney, Sheridan Memorial Hospital Psychiatrist, and Brittany Goodvin, Director of Behavioral Health. Dr. Kinney outlined his efforts to build collaborative relationships with external entities such as Volunteers of America, the Veterans Administration, Pediatric Physicians, regional therapists, and support systems within Sheridan Memorial Hospital. Since his arrival in November 2024, Dr. Kinney has been well received by the community.

Brittany Goodvin announced a Mental Health Collaborative on February 7, 2025, to be held at Sheridan College. This event will focus on identifying and addressing mental health resources within Sheridan and Johnson Counties. Following a lunch will be panel discussions and networking opportunities. The collaborative aims to:

- Establish a crisis stabilization plan.
- Emphasize the importance of ongoing mental health support.
- Facilitate a better understanding of available mental health services within the region among providers.
- Foster collaboration among stakeholders, with Sheridan Memorial Hospital leading the initiative.

Cody Sinclair then introduced Chad Slyngstad, House Supervisor/RN, and Alaina Bergstrom, Emergency Department/ICU Manager.

Chad Slyngstad requested funding for a Peripheral Vascular Device System, priced at approximately $15,545. This system facilitates ultrasound-guided IV placement, offering several key advantages:

Improved Portability: Allows for easier transport throughout the hospital for use in various departments.
Enhanced Training: Enables streamlined training, starting with house supervisors and subsequently expanding to other healthcare providers.
Improved Outpatient Surgery Outcomes: Assists in overcoming IV placement challenges faced by new nurses, leading to reduced patient discomfort and improved procedural efficiency.
Enhanced Emergency Care: Facilitates quicker IV access in critical situations.
Improved Patient Experience: Minimizes patient anxiety associated with unsuccessful IV attempts and ensures faster initiation of treatment.

Alaina Bergstrom requested funding for 12 new Emergency Department Carts, priced at $1,981.15 each for a total of $23,774. These carts are essential for providing immediate bedside care and are urgently needed to replace the current, deteriorating carts for which replacement parts are no longer available.

FUNDRAISING/PHILANTHROPY EDUCATION

Liz Dearcorn, Director of Philanthropy, shared a heartfelt letter from a grateful patient's family member. They expressed profound appreciation for the exceptional care their loved one received in both the Emergency Department and the Cath Lab. The letter highlighted the skill and compassion demonstrated by the entire healthcare team. In recognition of this outstanding care, the family made a generous donation to honor the caregivers.

CONSENT AGENDA (action):

Sue Belish presented the two items on the consent agenda (December 16, 2024 meeting minutes and December 2024 Checks, Transfers, and Journal Entries) and called for a motion. There were no questions or concerns.

DR. DOUGHTY MOVED TO APPROVE THE CONSENT AGENDA. MIKOLE BEDE SOTO SECONDED THE MOTION. THE MOTION CARRIED UNANIMOUSLY.

FOUNDATION REPORTS

FINANCE COMMITTEE MEETING REPORT

Cody Sinclair presented the Finance Committee meeting report. The committee discussed the investment performance of DA Davidson and First Interstate Bank, which met the established investment goals outlined in the Foundation's Investment Policy Statement (IPS). The annual review of the Investment Policy was also completed with no changes needed at this time.

DONOR & FUNDRAISING DEVELOPMENT COMMITTEE MEETING REPORT

Dr. William Doughty provided an overview of the Donor & Fundraising Development Committee and an update on the ongoing fundraising efforts for the Growing for You Campaign. Liz Dearcorn presented an updated Roadmap for Philanthropic Support (page 12), which outlines The Foundation's current financial position. As of December 31, 2024, The Foundation's remaining funds to be raised is $953,943.00.

COMMUNITY COORDINATION, EVENT/VOLUNTEER UPDATES & GRATIDUTDE REPORT

Jasmine Slater, Development Coordinator, reported that the Grateful Patient Quiet Kits, approved at the December 16, 2024 Board Meeting, are scheduled for production on January 31, 2025. These kits will be branded with The Foundation Logo and will soon be available for distribution to patients. The 2025 Golf Tournament was also discussed, with the date set for Monday, June 23, 2025.

DONOR RELATIONS UPDATE

Ada Kirven, Director of Donor Relations, reported that 1,685 gifts for various Funds and Pledges were received as of December 2024 (page 13). This impressive total included 12 major gifts exceeding $2,000. Notably, numerous Memorial and Honor Gifts were received, reflecting donor gratitude for the exceptional care provided to their loved ones.

Ada presented a funding request for the Peripheral Vascular Device System, priced at $15,545, to be allocated from Membership Funds (page 25). The committee acknowledged that the actual cost might be subject to inflationary increases.

Sue Belish suggested that based on board conversation that a motion be made to approve a budget of no more than $18,000 from Membership Funds for the acquisition of the Peripheral Vascular Device System, acknowledging potential inflationary cost increases.

> **YVONNE GATLEY MOVED TO APPROVE A BUDGET OF NO MORE THAN $18,000 FROM MEMBERSHIP FUNDS FOR THE ACQUISITION OF THE PERIPHERAL VASCULAR DEVICE SYSTEM. ROSEMARY RIEDER SECONDED THE MOTION. THE MOTION CARRIED UNANIMOUSLY.**

Ada also presented a funding request for the Emergency Department Carts, priced at $23,774, to be allocated from the Membership Funds.

Sue Belish called for a motion to approve the allocation of $23,774 for the Emergency Department Carts from Membership Funds.

> **RYAN FRANKLIN MOVED TO APPROVE $23,774 FROM THE MEMBERSHIP FUNDS FOR THE EMERGENCY DEPARTMENT CARTS. WENDY SMITH SECONDED THE MOTION. THE MOTION CARRIED UNANIMOUSLY.**

REPORTS

SMH BOARD OF TRUSTEES REPORT- RICHARD GARBER

Richard Garber emphasized the importance of increased public awareness regarding the independent nature of The Foundation, distinct from the Hospital Trustees. He highlighted the need to effectively communicate to the public the significant contributions of The Foundations to the advancement of healthcare in the community.

SMH PHYSICIANS- DR.JOSH SCOTT

Dr. Scott recently met with Dr. Villegas and Dr. Beverly, new additions to our healthcare team. Their expertise will significantly enhance the services we offer to our community.

On a personal note, Dr. Scott successfully performed his first Bariatric surgery, marking a significant step forward in providing advanced local healthcare options.

Furthermore, the use of medical robotics is increasing, with both Dr. Mangus and Dr. Maguire effectively utilizing this technology.

SMH AUXILIARY- ROSEMARY RIEDER

Rosemary Rieder reported that the Auxiliary's January meeting was successful. The group discussed the allocation of their fundraising proceeds and will vote during their February 7th meeting. With the retirement of one of the gift shop managers, the Auxiliary is currently exploring potential replacements.

OTHER BUSINESS

The next Board meeting will be on Monday, February 24, 2025 at 4:00 P.M. in Conference Room C.

ADJOURNMENT

With no further matters to come before the Board, Sue Belish adjourned the meeting at 5:20 pm.

Karen Boedeker, Recorder

Yvonne Gatley, Foundation Board Secretary

Sheridan County Memorial Hospital Foundation

Check Detail

January 2025

DATE	TRANSACTION TYPE	NUM	NAME	MEMO/DESCRIPTION	CLR	AMOUNT
OPERATIONS CHKG #6721 18-FFSB						
01/03/2025	Check	DM	Chamber of Commerce	Annual Membership Dues for 2025; Invoice 88533	R	-165.00
				Annual Membership Dues for 2025; Invoice 88533		165.00
01/03/2025	Check	4442	U.S. Postal Service	Annual PO Box 391 renewal for 2025	R	-182.00
				Annual PO Box 391 renewal for 2025		182.00
01/03/2025	Check	DM	Alphagraphics	2 Reams of Linen Classic paper; Inv# 24192	R	-102.00
				2 Reams of Linen Classic paper;Inv# 24192		120.00
				Nonprofit Partner Discount		-18.00
01/10/2025	Check	DM	Amazon. Com	Office Supplies-File folders, Highlighters, Post Its, Sharpies	R	-83.64
				Office Supplies-File folders, Highlighters, Post Its, Sharpies		62.19
				Office Supplies-File folders, Highlighters, Post Its, Sharpies		21.45
01/14/2025	Check	DM	Alphagraphics	#10 Business Envelopes, color,self sealing tax info	R	-123.25
				#10 Business Envelopes, color,self sealing tax info		142.35
				Nonprofit Partner Discount		-19.10
01/15/2025	Check	4443	SMH Misc.	Invoice #7362, 2024.12	R	-34,269.30
				Invoice #7362, 2024.12 Wages		30,588.02
				Invoice #7362, 2024.12 Partner Program		2,905.04
				Invoice #7362, 2024.12 Volunteer		619.64
				Invoice #7362, 2024.12 Donor Recognition		143.27
				Invoice #7362, 2024.12 Office Supplies		13.33
01/24/2025	Check	4444	Sheridan Press-Advertising	December 2024 Newspapers for patients; Inv# 0030950	R	-135.00
				December 2024 Newspapers for patients; Inv# 0030950		135.00
01/29/2025	Check	DM	Alphagraphics	#10 Business Envelopes, color,self sealing; Bulk mailing permit	R	-178.63
				#10 Business Envelopes, color,self sealing; Bulk mailing permit		207.50
				Nonprofit Partner Discount		-28.87
PROGRAM CHKG #03-930011-16						
TEMP RESTRICTED PROGRAM FUNDS						
Auxiliary Projects						
01/01/2025	Check	011140	SMH Auxiliary	Trees of Love Online Gifts		-265.00
				Trees of Love Online Gifts		265.00
Cancer Center						
WCC Breast Boutique						
Navigation Support						
01/23/2025	Check	DC	Oncology Nursing Society	Breast Cancer Bundle x4	R	-1,250.00
				Breast Cancer Bundle x4		1,250.00
WCC General Donations						
01/15/2025	Check	011145	SMH Misc.	Welch Cancer Center Reimbursement for Billings Clinic Radiation Oncology Services	R	-3,345.90
				Welch Cancer Center Reimbursement for Billings Clinic Radiation Oncology Services		3,345.90

Sheridan County Memorial Hospital Foundation

Check Detail

January 2025

DATE	TRANSACTION TYPE	NUM	NAME	MEMO/DESCRIPTION	CLR	AMOUNT
Cancer Screening						
Cancer Screening Early Detect						
01/15/2025	Check	011142	SMH Misc.	Cancer Screening and early detection, Patient 347308	R	-414.20
				Cancer Screening and early detection, Patient 347308		414.20
01/27/2025	Check	011148	SMH Misc.	Cancer Screening and early detection, Patient 344110	R	-1,743.91
				Cancer Screening and early detection, Patient 344110		1,038.10
				Cancer Screening and early detection, Patient 344110		705.81
Clinical Education Endowment						
01/15/2025	Check	011141	SMH Foundation DAD Investment Acct	Transfer of New Cash to Educational Endowment--#71032980	R	-15,000.00
				Clinical Education Endowment Gift		15,000.00
Growing For You						
Growing for You						
01/15/2025	Check	DB	U.S. Postal Service	Stamps for mailings- End Of Year Mailings	R	-365.00
				Stamps for mailings- End Of Year Mailings		365.00
01/15/2025	Check	011143	SMH Misc.	Invoice #7362, 2024.12	R	-148.97
				Invoice #7362, 2024.12		148.97
01/15/2025	Check	011144	Streamworks	New Movers Mailing List	R	-342.00
				New Movers Mailing List		342.00
01/22/2025	Check	011146	SMH Misc.	Growing for You funds as of 12/31/24	R	-150,000.00
				Growing for You funds as of 12/31/24		150,000.00
T.C.U.						
01/22/2025	Check	011147	SMH Misc.	TCU funds as of 12/31/24	R	-350,000.00
				TCU funds as of 12/31/24		350,000.00
UNRESTRICTED PROGRAM FUNDS						
Transfer for Operations						
01/21/2025	Check	DC	First Federal Bank & Trust	Deposit Slips	R	-102.65
				Main Street Checks - Printing Deposit Slips		102.65
01/31/2025	Check	DC	Blackbaud Transaction Fees	2025.01 Transaction Fees	R	-268.36
				2025.01 Transaction Fees		268.36

Sheridan Memorial Hospital Foundation

Journal Entries Last Month

January 2025

TRANSACTION TYPE	DATE	NUM	MEMO/DESCRIPTION	ACCOUNT	DEBIT	CREDIT
Journal Entry	01/01/2025	FY25Q3OpsDist	FY25 Q3 Operational Distribution	Budget Transfer Operating Funds:BudgetTransf Oprtn-Invest Fund	$100,000.00	
			FY25 Q3 Operational Distribution	Budget Transfer Operating Funds:Budgeted Operating Transfers		$100,000.00
					$100,000.00	**$100,000.00**
Journal Entry	01/31/2025	TD 01.31.25	Close FYE 6/30/24 net income to net assets	Permanent Restricted Net Assets		$15,291.00
			Close FYE 6/30/24 net income to net assets	Restricted Net Assets	$83,844.00	
			Close FYE 6/30/24 net income to net assets	Unrestricted Net Assets		$428,802.52
			Close FYE 6/30/24 net income to net assets	Retained Earnings	$360,249.52	
					$444,093.52	**$444,093.52**
Journal Entry	01/31/2025	Bishop 01.25 AQ		DAD Bishop Dialysis Endowment:Realized Gain (Loss)	$0.00	
				Other Investment Income:Bishop Endowment Fd:Realized Gains/Losses	$0.00	
				DAD Bishop Dialysis Endowment:Unrealized Gain (Loss)	$12,982.12	
				Other Investment Income:Bishop Endowment Fd:Unrealized Gains/Losses		$12,982.12
				DAD Bishop Dialysis Endowment:Bishop Endowment Income	$955.16	
				INVESTMENT INCOME:Dividends- Bishop Endowment		$949.65
				INVESTMENT INCOME:Interest - Bishop Endowment FF		$5.51
				Other Investment Income:Bishop Endowment Fd:Realized Gains/Losses	$0.00	
				DAD Bishop Dialysis Endowment:Bishop Endowment Income	$0.00	
				DAD Bishop Dialysis Endowment:Realized Gain (Loss)	$0.00	
				PROGRAM CHKG #03-930011-16:TEMP RESTRICTED PROGRAM FUNDS:Dialysis Unit:Bishop Dialysis Endowment Distr	$0.00	
				DAD Bishop Dialysis Endowment:Bishop Endowment Income		$747.34
				MANAGEMENT & GENERAL OPERATIONS:Investment Service Fees:Taxes - Foreign	$0.00	
				MANAGEMENT & GENERAL OPERATIONS:Investment Service Fees:Bishop Endowment Fd	$747.34	
					$14,684.62	**$14,684.62**
Journal Entry	01/31/2025	Cardiac Care 01.25 AQ	record monthly transactions	DAD Lorraine S Husman Trust:Realized Gain (Loss)	$0.00	
			record monthly transactions	Other Investment Income:DAD - Husman Trust - Cardiac:Realized Gains/Losses	$0.00	
			record monthly transactions	DAD Lorraine S Husman Trust:Unrealized Gain (Loss)	$191,707.94	

Sheridan Memorial Hospital Foundation

Journal Entries Last Month

January 2025

TRANSACTION TYPE	DATE	NUM	MEMO/DESCRIPTION	ACCOUNT	DEBIT	CREDIT
			record monthly transactions	Other Investment Income:DAD - Husman Trust - Cardiac:Unrealized Gains/Losses		$191,707.94
			record monthly transactions	DAD Lorraine S Husman Trust:DAD Husman Trust - Cardiac Care Principal	$0.00	
			record monthly transactions	DAD Lorraine S Husman Trust:DAD Husman Trust Income	$4,962.96	
			record monthly transactions	INVESTMENT INCOME:Dividends - DAD Husman TR Cardi		$4,901.72
			record monthly transactions	INVESTMENT INCOME:Interest - DAD Husman TR - Card		$61.24
			record monthly transactions - LTd Partnership Distribution	INCOME OTHER:PTP Distributions	$0.00	
			record monthly transactions	Other Investment Income:DAD - Husman Trust - Cardiac:Realized Gains/Losses	$0.00	
			record monthly transactions	DAD Lorraine S Husman Trust:DAD Husman Trust Income		$7,731.60
			record monthly transactions	MANAGEMENT & GENERAL OPERATIONS:Investment Service Fees:Taxes - Foreign	$0.00	
				MANAGEMENT & GENERAL OPERATIONS:Investment Service Fees:DAD - Husman Trust - Cardiac	$7,731.60	
				DAD Lorraine S Husman Trust:DAD Husman Trust Income	$0.00	
				DAD Gifting Account	$0.00	
				MANAGEMENT & GENERAL OPERATIONS:Investment Service Fees:Taxes - Foreign	$0.00	
					$204,402.50	**$204,402.50**
Journal Entry	01/31/2025	Nursing Edu 01.25 AQ		DAD Nsg Educational Endowment:Realized Gain (Loss)	$0.00	
				Other Investment Income:Nursing Educational Endow:Realized Gains/Losses	$0.00	
				DAD Nsg Educational Endowment:Scholarship Income	$1,497.14	
				INVESTMENT INCOME:Dividends -Scholarship Fun		$1,487.15
				INVESTMENT INCOME:Interest - Scholarship		$9.99
				Other Investment Income:Nursing Educational Endow:Unrealized Gains/Losses		$34,301.82
				DAD Nsg Educational Endowment:Unrealized Gain (Loss)	$34,301.82	
				DAD Nsg Educational Endowment:Scholarship Income		$1,151.77
				MANAGEMENT & GENERAL OPERATIONS:Investment Service Fees:Taxes - Foreign	$0.00	
				DAD Nsg Educational Endowment:Scholarship Income	$0.00	
				PROGRAM CHKG #03-930011-16:TEMP RESTRICTED PROGRAM FUNDS:Clinical Ed Endowment Income	$0.00	
				MANAGEMENT & GENERAL OPERATIONS:Investment Service Fees:Nursing	$1,151.77	

Sheridan Memorial Hospital Foundation

Journal Entries Last Month

January 2025

TRANSACTION TYPE	DATE	NUM	MEMO/DESCRIPTION	ACCOUNT	DEBIT	CREDIT
				Scholarship Endow		
				DAD Nsg Educational Endowment:Realized Gain (Loss)	$0.00	
				Other Investment Income:Nursing Educational Endow:Realized Gains/Losses	$0.00	
					$36,950.73	**$36,950.73**
Journal Entry	01/31/2025	FIB Invest 01.25 AQ		FIB Investment Account:FIB Investments - Other	$997.99	
				INVESTMENT INCOME:Dividends - FIB		$997.99
				MANAGEMENT & GENERAL OPERATIONS:Investment Service Fees:FIB - Investments	$1,047.80	
				FIB Investment Account:FIB Investments - Other		$1,047.80
				FIB Investment Account:FIB Investments - Other		$5,458.67
				Other Investment Income:FIB - Investment Account:Unrealized Gains/Losses	$5,458.67	
				FIB Investment Account:FIB Investments - Other	$0.00	
				Other Investment Income:FIB - Investment Account:Realized Gains/Losses	$0.00	
				FIB Investment Account:FIB Investments - Other	$0.00	
				Other Investment Income:FIB - Investment Account:Realized Gains/Losses		
				Other Investment Income:FIB - Investment Account:Realized Gains/Losses		$66,920.11
				FIB Investment Account:FIB Investments - Other	$66,920.11	
				FIB Investment Account:FIB Investments - Other		
				Other Investment Income:FIB - Investment Account:Realized Gains/Losses		
				Other Investment Income:Realized Gain/Loss - Stock Gift		
				DONATIONS - New Cash/New Pledge:Donations - Growing for You	$0.00	
				Other Investment Income:FIB - Investment Account:Realized Gains/Losses	$0.00	
					$74,424.57	**$74,424.57**
Journal Entry	01/31/2025	Pledges 01.25 AQ	To adjust Pledges	Pledges Receivable:Pldgs Rec - Healthy Garden	$0.00	
			To adjust Pledges	Pledges Receivable:Pldgs Rec - Golf Tournament	$2,000.00	
			To adjust Pledges	Pledges Receivable:Pldgs Rec - Membership Fund	$1,000.00	
			To adjust Pledges	Pledges Receivable:Pldgs Rec - Unrestricted-Great	$0.00	
			To adjust Pledges	Pledges Receivable:Pldgs Rec -The Link Partners	$2,000.00	
			To adjust Pledges	Pledges Receivable:Pldgs Rec - Transitional Care	$0.00	
			To adjust Pledges	DONATIONS - New Cash/New Pledge:Donations - Golf Tournament		$2,000.00
			To adjust Pledges	DONATIONS - New Cash/New Pledge:Donations - Healthy Garden	$0.00	
			To adjust Pledges	DONATIONS - New Cash/New Pledge:Donations - Membership Fund		$1,000.00
			To adjust Pledges	DONATIONS - New Cash/New Pledge:Donations - Unrestricted Great	$0.00	
			To adjust Pledges	DONATIONS - New Cash/New Pledge:Donations - The Link		$2,000.00

Sheridan Memorial Hospital Foundation

Journal Entries Last Month

January 2025

TRANSACTION TYPE	DATE	NUM	MEMO/DESCRIPTION	ACCOUNT	DEBIT	CREDIT
			To adjust Pledges	DONATIONS - New Cash/New Pledge:Donations - Transitional Care	$0.00	
			To adjust Pledges	DONATIONS - New Cash/New Pledge:Donations - Growing for You		$10,000.00
			To adjust Pledges	Pledges Receivable:Pldgs Rec - Growing for You	$10,000.00	
			To adjust Pledges	Pledges Receivable:Pldgs Rec - Hospice of BH's	$0.00	
			To adjust Pledges	DONATIONS - New Cash/New Pledge:Donations - Hospice	$0.00	
			To adjust Pledges	Pledges Receivable:Pldgs Rec - Cardiac Care	$0.00	
			To adjust Pledges	DONATIONS - New Cash/New Pledge:Donations - Cardiac Care	$0.00	
			To adjust Pledges	DONATIONS - New Cash/New Pledge:Donations - Unrestricted Great	$0.00	
			To adjust Pledges	DONATIONS - New Cash/New Pledge:Donations - Transitional Care		
					$15,000.00	**$15,000.00**
Journal Entry	01/31/2025	FIB Op 01.25 AQ		FIB-Investment- Operating Fund:Operating Fund Income	$1,492.65	
				INVESTMENT INCOME:Dividends - FIB Operating Fd		$1,492.65
				FIB-Investment- Operating Fund:Operating Fund Income		$494.93
				MANAGEMENT & GENERAL OPERATIONS:Investment Service Fees:FIB - Opertaing Fund	$494.93	
				FIB-Investment- Operating Fund:Unrealized Gain (Loss)	$9,585.37	
				Other Investment Income:FIB - Operating Fund Investment:Unrealized Gains/Losses		$9,585.37
				FIB Investment Account:FIB Investments - Other	$0.00	
				FIB-Investment- Operating Fund:Operating Fund Income	$0.00	
				FIB Investment Account:FIB Investments - Other	$0.00	
				Other Investment Income:FIB - Operating Fund Investment:Realized Gains/Losses	$5,242.79	
				FIB-Investment- Operating Fund:Realized Gain (Loss)		$5,242.79
					$16,815.74	**$16,815.74**
TOTAL					**$906,371.68**	**$906,371.68**

The Foundation
Sheridan Memorial Hospital

Roadmap for Philanthropic Support of SMH's Strategic Plan

SMH Foundation Mission: To culvate community involvement and support the hospital's vision through advocacy, financial support, and stewardship.

Behavioral Health	$17,502,953
*Pharmacy/Respiratory Move	
*Pediatrics Move/Remodel	
*Med-Surg Move/Remodel	
*Inpatient, Outpatient & Crisis Stabilization	
Emergency Department Update	$1,480,000
Total Goal to raise by December 31, 2026	**$18,982,953**

Secured Government Funding 2023-2024	
Wyoming SLIB Board Funding (Behavioral Health)	$5,900,000
Wyoming SLIB Board Funding (Emergency Department)	$480,000
Sheridan County	$2,500,000
Total Secured Government Funding 2023-2024	**$8,880,000**

***UPDATED* Funding 2024-2026**	
Wyoming ARPA Inflationary Funding *(11/1/2024)*	$1,000,000
Sheridan Memorial Hospital	$982,953
Foundation Gifts & Pledges through 1/31/2025	**$7,185,872**
SMH Foundation Fund Raising Remaining to 12/31/2026 Goal	**$934,128**
Total	**$18,982,953**

1/31/2025

The Foundation Sheridan Memorial Hospital

Important Dates—

- Monday, February 24 — Foundation Board Meeting, 4 pm, Cafeteria Conf C
- Wednesday, February 26 — Board of Trustee Meeting, 4 pm, Cafeteria Conf A/B
- Monday, March 24 — Foundation Board Meeting, 4 pm, Cafeteria Conf C

Activities:

1. January 2025 Gift Overview: 1,085 Gifts for Various Funds, Behavioral Health and TCU Pledges

Monthly Cash to Bank	**$74,245.62**
Pledge Payments Received	$18,071.47
New Cash/Stock	$52,163.15
Employee Partner Gifts	$4,011.00

Memorial and Honor Gifts for Last Month

- Becky Adams, Welch Cancer Center
- Neil Delapp, Welch Cancer Center
- Maxine Fudge, Unrestricted
- Suzanne Hill, Wound Care
- Florence McClure, Membership
- SMH Cath Lab, Unrestricted
- SMH Emergency Department, Unrestricted
- Ruth R. Redle, Growing for You
- William D. Redle, Growing for You
- Dana M. Wood, Welch Cancer Center

New Donors this Fiscal Year

FY25	July-Jan	198	$59,764
FY24	July-June	322	$328,584

Foundation Staff Donor Actions Completed Last Month

Phone Call	32
Meeting	4
Mailing	456
Email	9

Major Gifts Received, $2,000 or more

1.	The Seidler Foundation	$30,000.00
2.	Michelle L. Meehan, D.D.S	$12,000.00
3.	Mr. and Mrs. William E. Baas	$5,000.00
4.	Intermountain Health, Peaks Region	$5,000.00
5.	Derek Gilbert, M.D.	$5,000.00
6.	Mr. and Mrs. Mark Kinner	$2,500.00
7.	Dr. and Mrs. Patrick M. Meehan	$2,000.00
8.	Mr. and Mrs. Gary Campbell	$2,000.00
9.	Greg and Cathy Bealer	$2,000.00
10.	ERA Carroll Realty Co., Inc.	$2,000.00

Monthly Financial Summary Report				
Ryan Franklin, Foundation Board Treasurer				
January 2025 Financial Overview				
Total Cash Assets Balance Forward		12/31/2024	$ 15,261,644.14	**Increase/Decrease**
1	Total Income ***(breakout below)***	1/31/2025	$ 89,243.82	
2	*New Cash & Pledges, $71,174.15* *Investment Income, $18,069.67*			
3	Total Fund Raising Expenditures	1/31/2025	$ (855.97)	
4	Operation Expenses (professional fees)	1/31/2025	$ (46,585.70)	
5	Program Distributions to SMH	1/31/2025	$ (522,019.01)	
6	Investment Unrealized Gain/Loss	1/31/2025	$ 304,795.90	
	Total Assets		**$15,086,223.18**	**-$175,420.96**
Investments - FIB, D.A. Davidson & TDA			**Values**	**% of Holdings**
	DAD Bishop Endowment	1/31/2025	$ 619,362.18	6%
	DAD Gifting Account	1/31/2025	$ 0.53	0%
	DAD Lorraine S Husman Trust	1/31/2025	$ 6,460,122.52	58%
	DAD Educational Endowment	1/31/2025	$ 968,862.80	9%
	FIB Unrestricted	1/31/2025	$ 2,149,486.23	19%
	FIB Operational	1/31/2025	$ 942,178.72	8%
Total Investment Assets			**$11,140,012.98**	**100%**

Projects on Agenda for Review

1. AccuVein AV500 (Vein Finder)

Recommended Unrestricted Fund:

- Membership Fund, pg.30, $5,230

2. Auxiliary Challenge: Mini C-arm

Recommended Unrestricted Fund:

- Unrestricted Fund, pg.30, $43,950

Month	
Jan-25	**$11,140,012.98**
Dec-24	$10,936,484.62
Nov-24	$11,214,402.73
Oct-24	$10,650,798.37
Sep-24	$10,960,944.06
Aug-24	$10,773,281.67
Jul-24	$10,549,117.50
Jun-24	$10,502,056.67
May-24	$10,320,572.24
Apr-24	$9,990,628.16
Mar-24	$10,420,501.03
Feb-24	$10,200,324.15
Jan-24	$9,933,480.01

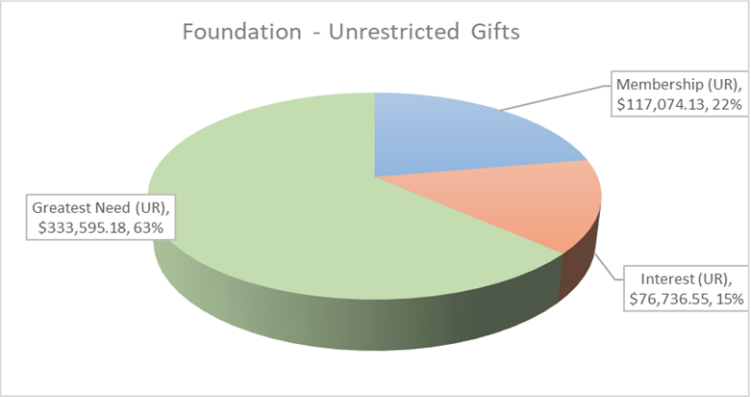

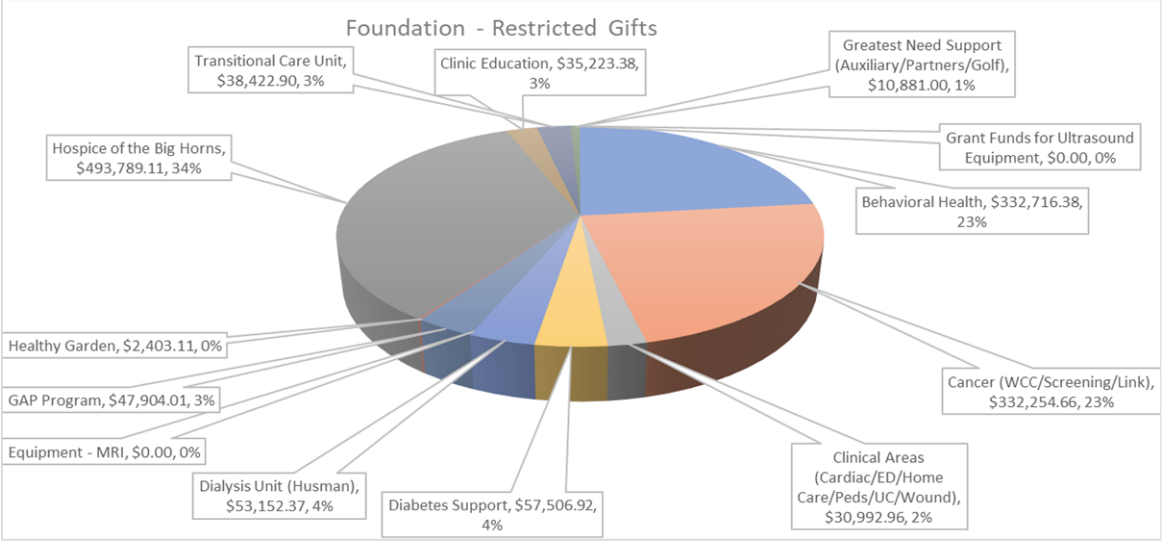

SALES QUOTE

184824-1

InnerSpace | 1239 Comstock Street Marne, MI 49435 | 888-435-2256 phone | 616-743-5944 fax | innerspacehealthcare.com

CUSTOMER:

Sheridan Memorial Hospital
1401 W 5th St
Sheridan, WY 82801

Andrew Park
andrewpark@sheridanhospital.org

END USER:

Sheridan Memorial Hospital
1401 W 5th St
Sheridan, WY 82801

Andrew Park
andrewpark@sheridanhospital.org

QUOTE INFORMATION:

QUOTE NO.	184824
CREATED	2/27/2024
LAST MODIFIED	1/30/2025
PREPARED BY	SGARASCIA

SALES REP DETAILS:

Sales Rep: **Kristen Cousino** Phone Number: **303-883-6191** E-mail: **Kristen@medconpartners.com**

Notes

ITEM NO	DESCRIPTION	QUANTITY	UNIT PRICE	EXT. PRICE
SP27	Aluminum Pace 27 Cart, Build-a-cart			
PACECLASSICBASE	PaceClassic Base Substitution	12	$0.00	$0.00
SP27WF	Pace 27, White Frame,39.25"H	12	$744.48	$8,933.76
SP3DLB	Pace DrawerSky, 3"	24	$65.84	$1,580.16
SP6DLB	Pace DrawerSky, 6"	24	$93.69	$2,248.56
SP9DLB	Pace DrawerSky, 9"	12	$116.49	$1,397.88
SPSDLW	PaceInterConnect Keypad Lock	12	$603.84	$7,246.08
STD3	3" Gray Tray w/3 Long-3 Short Clear Dividers	24	$86.33	$2,071.92
STD6	6" Gray Tray w/3 Long-3 Short Clear Dividers	24	$86.33	$2,071.92

This quote reflects your Vizient discount associated with our Vizient Diversity Supplier Contract CE2907.

Total Price **$25,550.28**

This order may be subject to sales tax unless a valid tax exempt form is provided.

TERMS AND CONDITIONS:
Acceptance of this quote shall be acceptance of all terms and conditions listed on the final page of this quote. This order will be considered accepted unless a notice of cancellation is emailed to cs@innerspacehealthcare.com within 24 hours of the date of the order.

Please note: if paying by credit card, a 4% processing fee will be assessed on the total dollar value of the invoice.

ALL RIGHTS RESERVED
This material is proprietary and confidential, and the disclosure, reproduction or incorporation into any system without the written approval from InnerSpace Healthcare is prohibited.

InnerSpace | 1239 Comstock Street Marne, MI 49435 | 888-435-2256 phone | 616-743-5944 fax | innerspacehealthcare.com

InnerSpace® Terms and Conditions

InnerSpace terms and conditions posted on the InnerSpace website (innerspacehealthcare.com) supersede all other terms, including verbal statements communication, unless agreed upon in writing.

Prices
Any quotations provided by an authorized Solaire Medical Storage, LLC (DBA InnerSpace), associate shall remain in effect for ninety (90) days from the origination date listed on the quotation unless otherwise noted by a listed expiration date. All quotations are subject to credit approval prior to acceptance by InnerSpace.

Payment
Orders are invoiced at the time of shipment. Payment terms are net 30 days. A finance charge of one (1%) percent per month or twelve (12%) percent per year will apply to all obligations not paid according to the terms and conditions herein. In the event the account is turned over to an attorney or other agency for collection, buyer shall pay all reasonable collection fees, attorney fees, and court cost incurred by the seller. Third-party purchase orders must be accompanied with 50% prepayment of the order value. The remaining order balance plus freight charges are due net 30 days after the shipment date.

Accepted forms of payment include paper check, ACH, and credit card (Visa and Mastercard only). When paying with a credit card, a processing fee of 4% will be assessed on the dollar total of the invoice.

Taxes
Quoted prices do not include taxes of any sort, including but not limited to state and local sales tax. All taxes shall be paid by the customer in addition to the quoted price. Customers shall deliver any certifications and other documents required to demonstrate eligibility and to benefit from any exemption or other relief from any tax.

Freight and Handling
Quoted prices do not include applicable freight and handling charges. InnerSpace will pre-pay and add freight charges. Freight terms are FOB destination when shipping pre-pay and add.

Online Freight
InnerSpace ships online orders within the continental United States only. Freight rates are calculated and billed at the time of checkout.

Third-Party Freight Terms
While InnerSpace discourages the use of third-party freight carriers, we will accommodate a customer's request, provided the customer notifies InnerSpace at the time of order of the decision to use a third-party shipper and provides the carrier's information. When a third-party shipper is used, freight terms are FOB origin and the customer assumes all responsibility for any shipping or handling damage. A signed Third-Party Shipping Waiver is required prior to shipping product. If the signed waiver is not received prior to shipment date, InnerSpace reserves the right to ship with our preferred carrier and add freight charges to the invoice.

Damaged Shipments
It is the buyer's responsibility to examine products upon delivery. Any visible damage must be noted on the carrier's Bill of Lading. If there is visible damage to the product upon arrival, the buyer is instructed to refuse delivery of the damaged product. Failure by the purchaser to make any claim against the company within seven (7) days of receipt of the product shall constitute acceptance of the products and a waiver of product damages or shortages.

Hold Orders
An estimated ship date is provided on the order confirmation. If an order is released into production and placed on HOLD by the buyer for a later ship date, then a minimum daily storage fee of $100 will be incurred.

Returns
Returns must be made within 30 days from the date of original shipment. All returned goods must be in new, salable condition and have an authorization number assigned by Customer Service. Evolve cabinets or casework, custom orders, drying cabinets or retrofit kits, and Quick Wall, Quick Rack, and Quick Wire open storage products are nonreturnable. Original and return freight charges are the responsibility of the buyer. A 50% restocking fee will be charged on all returned merchandise. Returns may be made as a credit to the customer's account.

Order Changes and Cancellations
Order changes and cancellation requests will be handled on a case-by-case basis. A change or cancellation will be accepted within 72 hours of placing an order at no charge. After 72 hours, a fee may be incurred up to the full order value. This fee is determined by the percentage of the order complete at the time of change or cancellation.

InnerSpace Cloud Services
Orders with technology services are subject to our Master Service Agreement. (https://innerspace.cloud/msa).

Warranty
Follow this link to see the full product warranty: (https://innerspacehealthcare.com/wp-content/uploads/terms-warranty/innerspace-product-warranty.pdf)

-

SPSDLW
INTERCONNECT LOCK

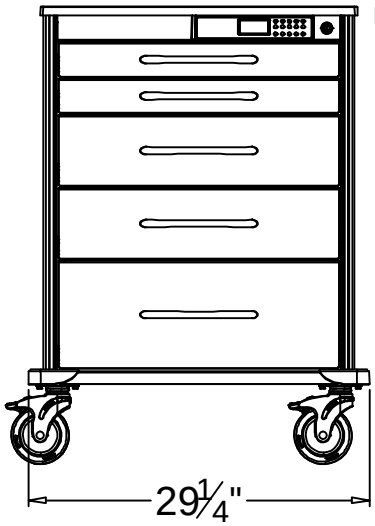

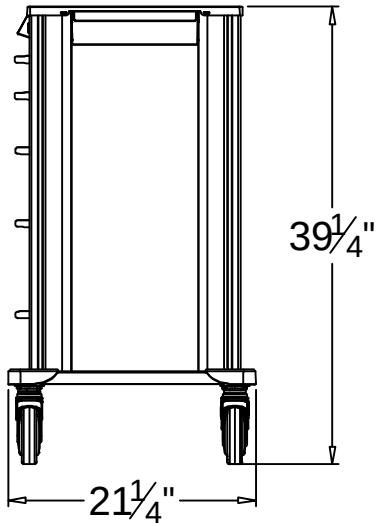

SP27WF
W/
PACECLASSICBASE

Inner Space
Office: 888.435.2256
Fax: 616.743.5944
1239 Comstock St
Marne, MI 49435
innerspacehealthcare.com

Products that reflect a custom design cannot be returned. If custom in nature, please review this drawing for material and dimensional requirements, and sign for acceptance.

Signature Date

Colors

Body Color	WHITE
Drawer Color	SKY BLUE

Drawer handles are grey.

SHERIDAN MEMORIAL HOSPITAL

Rev. B	Quote No.	184824	
Date 1/30/2025	Drawn By	SS	

Foundation Team,

The outpatient surgery staff have been requesting a vein finder in outpatient surgery for a while now. We had one previously and it was utilized by several departments, including the house supervisors. It was damaged and deemed unrepairable. Unfortunately, we have yet to purchase another one due to budget constraints.

Specifically in outpatient surgery, we serve a wide range of patient populations including young toddlers to the most respected elderly in our community. For most patients, the intravenous (IV) start is the most dreaded part of their preoperative experience, but is 100% required for their treatment. When it is challenging to successfully perform this task, the patient and family's anxiety increases, the preoperative time increases which sometimes leads to on time surgical start delays, and we do receive patient comments in our OASCAHPS surveys regarding how this impacted their overall experience and care at our organization. Given these things, I believe it is beneficial to provide our staff with the most up to date resources to perform their duties to the best of their ability.

As a previous house supervisor who utilized this piece of equipment throughout our hospital on a variety of ages and patient populations, I find tremendous value in its' use and precision for accurately finding veins for IV catheter placement. The RNs' confidence and accuracy is enhanced, along with the patient's confidence in our skillset to perform this task with ease and improves the patient and family's overall experience.

We are so grateful to the foundation from an organization as a whole and all the many ways they support our hospital, staff, and patients in our community. On behalf of my staff and our patients, I would love to be considered for a vein finder.

Attached you will find a quote for an AccuVein vein finder. This is the exact model we had previously and is the one requested by the staff. Additionally, an updated quote is provided that is good through December 22, 2024.

Please let me know if you have any questions. Thank you so much!

AccuVein®

CASE #	2405-52571
S/N #	AV20470025

TO: Sheridan Memorial Hospital
Drew Worman
drewworman@sheridanhospital.org

DATE:	February 12, 2025
EXPIRES:	April 13, 2025

Ship to: Products ship to Shipping Address on the PO
GPO:

AccuVein Rep Contact Info: Scotty McFarland
(720) 701-1180
smcfarland@accuvein.com

Terms: Net 30

Tax Status: Tax Exempt

*Please be sure to send **TAX EXEMPT CERTIFICATE** with your PO or you may be responsible for any sales tax*

QTY	ITEM #	DESCRIPTION	YOUR PRICE	DISCOUNT	FINAL PRICE	TOTAL
VEIN VISUALIZATION SYSTEMS / SERVICE PLANS						
1	AV500 Conversion	**Vein Visualization System Trade-In/Exchange** (incl 1 Year Platinum, charging cradle, power supply, and manual)	$ 4,202.00	$ -	$4,202.00	$ 4,202.00
		Handling Charges				$ 30.00

SUBTOTAL	**$4,232.00**
Total Discount	***$0.00***
% Discount	***0%***

SHIPPING					
	SHIP	Shipping (UPS Ground)	**Choose One**	$ 45.00	$ 45.00
	SHBL	Bill Shipping To Your Account Your Courier A/C # must be noted on PO		$ 10.00	$ 10.00

DELIVERY LEAD TIME: Estimated shipping lead time is 5-10 business days from receipt of PO
Please submit all Purchase Orders to: service@accuvein.com

Platinum Annual Service Plan

AV500 Device Only. Max 2 additional years. *Does not include charging cradle, power supply or any other accessories*

unlimited exchanges of malfunctioning AV500 (including physical damage)
maximizes clinical availability

	In Warranty		Out of Warranty
	At Purchase	After 90 Days	After Warranty Expiration
PLT1 (1 Year)	***$499***	***$899***	***N/A***
PLT2 (2 Years)	***$998***	***$1,798***	

**** Pricing reflects per unit cost****

Terms and Conditions

The terms and conditions in this quotation apply to all orders placed with AccuVein and may not be superseded by Purchase Order "boilerplate." If this quote is provided to an active member of a GPO then the terms of the GPO contract supersedes this quotation and any PO boilerplate.

AccuVein®

CASE #	2405-52571
S/N #	AV20470025

TO: Sheridan Memorial Hospital
Drew Worman
drewworman@sheridanhospital.org

DATE:	February 12, 2025
EXPIRES:	April 13, 2025

Trade-In/Exchange Program

This quote reflects promotional trade-in program pricing. Upon receipt of your order, the following process will be followed:

1. AccuVein will confirm receipt and provide estimated shipping information.

2. After your AV500 units are received and in-serviced in your facility, pack the AVx00(s) being returned in the box(es) used to ship the new AV500(s) and return to AccuVein using the UPS labels provided by AccuVein.

3. AccuVein Customer Support will issue the Return Material Authorization (RMA) and return shipment instructions for the unit(s) being traded in. To activate your Platinum Service and receive credit for the trade-in(s), use the instructions and UPS return label(s) to return the trade-in units **within 30 days** of receiving the new AV500(s).

   - Only AVx00(s) purchased by the customer from AccuVein, or an authorized U.S. distributor are eligible for trade-in/exchange as part of this program

   - If the number of units returned to AccuVein within the 30-day period is less than the number of new AV500 units shipped, AccuVein will invoice the difference between the promotional price and the hospital's GPO schedule for the number of new AV500's shipped with no corresponding AVx00 being returned.

4. AccuVein Platinum Service coverage offered for your newly deployed AV500(s) will become effective upon receipt of the units being returned in step 3 above.

Cost of Ownership vs. Cost of Failed PIV's

Cost of Ownership

AV500 Device	+	$5,300 per device
HF580 Stand	+	$660 per stand
Extended Warranty (3 Years)		$998
Total Upfront Cost	/	**$6,958**
5-Year depreciation		1825 days
Total Cost of AccuVein (w/Stand and Extended Warranty)	=	**$3.81** / day

Failed Attempt PIV Cost

Cost of PIV disposable supplies (PIVC = $1.80 / Start kit $2.00)	**$3.80**
Cost of EACH additional PIV start attempt	$3.80+

Daily Disposable Savings

3 Patients a day	=	**$11.40**
10 Patients a day	=	**$38.00**
20 Patients a day	=	**$76.00**
40 Patients a day	=	**$152.00**
5 Patients Assessed	=	**$19.00**

10-unit investment model with only 50 patients assessed a day

Investment: 10 units @ $3.81 = $38.13 a day
Savings: 50 Patients treated @ $3.80 = $190 savings a day

AccuVein

Learn.Accuvein.com

Scan code to view AccuVein training videos!

Real Disposable Cost Savings:

- Multiple studies confirm, it takes on average 2.2 sticks to place a peripheral IV catheter [3,4,5,6]
- Each additional stick cost > $3.80 for disposable supplies alone [1]
- Assuming 40,000 PIVC's purchased a year with 2.2 sticks on average = 20,000 wasted PIVC and supplies
- 20,000 failed starts at $3.80 **= $76,000 is unnecessary wasted disposable cost / $208 per day**
  - Just PIVC alone: 20,000 failed starts at $1.80 = $36,000 / $98 a day

Related Cost Savings:

- Reduce unnecessary PICC lines at a disposable cost of $100+.
- Help reduce CLABSI at a cost of $45,000 and PIVC BSI of $37,000 per incident
- Outside service to place PIVC at a cost of $300 per insertion
- Internal cost of escalation calls cost time and money

1. Harper, D., Midline Catheter Insertion, INC 2012
2. IV Therapy : https://iv-therapy.net/topic/cost-peripheral-iv-start
3. Walsh, G. Difficult Peripheral Venous Access: Recognizing and Managing the Patient at Risk. J Accoc Vascular Access 2008; 13(4):198-203
4. Barton, et al, Improving Patient Outcomes Through CQI: Vascular Access Planning, J Nurse CareQual, 1998; 13(2):77-85
5. Kokotis, et al, Cost Containment and Infusion Services, J Infusion Nurse 2005; 28(2S):S22-S32.
6. LaRue, CD, Efficacy of Ultrasonography in Peripheral Cannulation, J Infusion n Nurse , 2000, 23:29-34

Increase patient and staff satisfaction

By integrating advanced technology into standard protocols and supporting the highest level of care, hospitals can dramatically improve the patient experience while demonstrating a deep commitment to a multi-generational workforce with varying knowledge, skills and experience.

100% of hospital HR professionals agree that employee and patient satisfaction is a top priority[1]

Fewer than 57% of nursing students receive PIVC instruction[2]

82% of nurses believe that technology positively impacts patient care[3]

#1 patient concern is pain associated with multiple needle sticks[4]

AccuVein-guided IV insertion =
39% reduction in pain
45% reduction in patient stress[5]

84% of staff surveyed prefer AccuVein (to traditional PIVC techniques)[6]

80% of staff surveyed reported more efficient diagnosis with AccuVein[4]

1. Enhancing Nurse Well-Being Nationwide HOLLIBLU and Feedtrail Mental Health Nurse Survey
2. Glover KR, Stahl BR, Murray C, et al. A Simulation-Based Blended Curriculum for Short Peripheral Intravenous Catheter Insertion: An Industry-Practice Collaboration. J Contin Educ Nurs. 2017
3. https://avanthealthcare.com/blog/articles/how-technology-is-impacting-nursing-practice-in-2019.stml
4. Steere L, Ficara C, Davis M, Moureau N. Reaching One Peripheral Intravenous Catheter (PIVC) Per Patient Visit with Lean Multimodal Strategy: the PIVSRights™ Bundle. Journal of the Association for Vascular Access (2019) 24 (3): 31-43
5. Guillon P., Makhloufi, M., Prospective evaluation of venous access difficulty and a near-infrared vein visualizer at four French hemophilia treatment centers, Hemophilia (2014), 1-6
6. Accepted abstract for AVA 2021 conference.

©2021, AccuVein Inc. AccuVein is a registered trademark of AccuVein Inc.

AccuVein

SHERIDAN MEMORIAL HOSPITAL Date: 2.29.2024	**Technology Requested:** **Mini C-arm**	**Owner:** **Brent Maurhoff/Cassie Kehr** **Stakeholders: Ortho Surgeons ED physicians**

Reason for Purchase (What is the problem? Why is it important?)	Target Condition(s): (What is the Goal?)
The Mini C-arm would be used for small bone orthopedic fractures. This unit can be used by the surgeon without a radiology tech. These units are designed to use minimal radiation decreasing exposure to the patient and the staff.	Use of the Mini C-arm for small bone fractures and extremities procedures where X-ray is indicated Patient Care impact: Minimal radiation decreasing exposure to the patient and the staff. Value Added: Staffing flow for radiology
Current Condition	Gap Analysis
Currently we use a large C-arm with an x-ray tech for all x-ray procedures.	Use large C-arm unit for all procedures where x-ray is indicated Require radiology tech to run c-arm

Solutions (Equipment or Software)			
Vendors (2 required)	*Ortho Scan*	*GE OEC*	
Cost of Technology	*104,800 Old Quote obtaining updated quote.*	*104,800*	
Interfaces (see FAQ)	*Yes Cerner/PACS*		
Service Contract	☐ *# of years _____* ☐ *Vendor* ☐ *Local* ☐ *None*	☐ *# of years _____* ☐ *Vendor* ☐ *Local* ☐ *None*	☐ *# of years _____* ☐ *Vendor* ☐ *Local* ☐ *None*
Functions/Demo			
Training/ Education needed			
Useful Life			

Existing Asset Information: contact Zach Shada at 672-1165 for this information			
	Useful life remaining:	*Balance remaining:*	
Disposal Plan:	☐ *Trade In*	☐ *Sell*	☐ *Trash*
Chief approval:			

Bacon Healthcare Corporation
4 Lauren Ave South
Dix Hills, NY 11746 US
1 (800) 643-2998
info@minicarm.com
www.minicarm.com

ADDRESS
Meeghan Walton
Sheridan Memorial Hospital
1401 W 5th St
Sheridan, WY 82801 USA

Estimate 2316

DATE 04/02/2024

ACTIVITY	QTY	RATE	AMOUNT
Orthoscan FD Pulse Mini C-Arm - Selectable Pulse Rate: Cont/30 pps/15 pps/7.5 pps/2 pps - Resolution capability range: 1.5 k x 1.5 k - Frames per second range: 30 - Viewing area: 167 cm2 (versus 165 cm2 II) - Uniform response across the field of view - Industry standard DVI/VGA outputs - Stores 8,000 images on the unit - Weight: 400lbs	1	56,000.00	56,000.00
Shipping Shipping Expense	1	950.00	950.00

* Shipping rate is subject to change & will be added to final invoice *

- Fully refurbished with a one year warranty

TOTAL **$56,950.00**

Accepted By

Accepted Date

All Sales Are Final.

Your acceptance of this estimate or shipment of the goods is an acknowledgement that you have received, reviewed, accepted and intend to be bound by such Terms and Conditions of Purchase herein located online at https://www.minicarm.com/msa

Sheridan County Memorial Hospital Foundation

Budget vs. Actuals: Budget_FY25_P&L - FY25 P&L

July 2024 - January 2025

	TOTAL				
	ACTUAL	BUDGET	OVER BUDGET	REMAINING	% OF BUDGET
Income					
Budget Transfer Operating Funds		0.00	0.00	0.00	
Budgeted Operating Transfers	280,000.00	419,917.00	-139,917.00	139,917.00	66.68 %
Total Budget Transfer Operating Funds	**280,000.00**	**419,917.00**	**-139,917.00**	**139,917.00**	**66.68 %**
Total Income	**$280,000.00**	**$419,917.00**	**$ -139,917.00**	**$139,917.00**	**66.68 %**
GROSS PROFIT	**$280,000.00**	**$419,917.00**	**$ -139,917.00**	**$139,917.00**	**66.68 %**
Expenses					
MANAGEMENT & GENERAL OPERATIONS	0.00	0.00	0.00	0.00	
Accounting	3,300.00	11,000.00	-7,700.00	7,700.00	30.00 %
Advertising & Marketing	1,635.00	2,500.00	-865.00	865.00	65.40 %
Bank Service Charges	7.00	0.00	7.00	-7.00	
Credit Card Fees	1,231.13	1,500.00	-268.87	268.87	82.08 %
Insurance	800.00	820.00	-20.00	20.00	97.56 %
Office Expenses	102.65	0.00	102.65	-102.65	
Computer Support	16,737.29	16,900.00	-162.71	162.71	99.04 %
Postage and Delivery	1,773.55	4,200.00	-2,426.45	2,426.45	42.23 %
Printing and Reproduction	474.80	3,200.00	-2,725.20	2,725.20	14.84 %
Supplies/Other	2,188.48	1,500.00	688.48	-688.48	145.90 %
Total Office Expenses	**21,276.77**	**25,800.00**	**-4,523.23**	**4,523.23**	**82.47 %**
Professional Fees		0.00	0.00	0.00	
Dues	1,172.25	3,000.00	-1,827.75	1,827.75	39.08 %
Education/Seminars	2,082.45	5,000.00	-2,917.55	2,917.55	41.65 %
Legal Fees	625.00	1,000.00	-375.00	375.00	62.50 %
Total Professional Fees	**3,879.70**	**9,000.00**	**-5,120.30**	**5,120.30**	**43.11 %**
Professional Fees for Services	197,377.39	350,097.00	-152,719.61	152,719.61	56.38 %
Recognition Program		0.00	0.00	0.00	
Donor Recognition Expenses	2,633.52	6,300.00	-3,666.48	3,666.48	41.80 %
Partner Program	6,285.21	8,200.00	-1,914.79	1,914.79	76.65 %
Special Events		500.00	-500.00	500.00	
Annual Meeting	380.50	0.00	380.50	-380.50	
Total Special Events	**380.50**	**500.00**	**-119.50**	**119.50**	**76.10 %**
Total Recognition Program	**9,299.23**	**15,000.00**	**-5,700.77**	**5,700.77**	**61.99 %**
Travel Expenses	1,809.41	1,000.00	809.41	-809.41	180.94 %
Volunteer Programs	807.11	3,200.00	-2,392.89	2,392.89	25.22 %
Total MANAGEMENT & GENERAL OPERATIONS	**241,422.74**	**419,917.00**	**-178,494.26**	**178,494.26**	**57.49 %**
Total Expenses	**$241,422.74**	**$419,917.00**	**$ -178,494.26**	**$178,494.26**	**57.49 %**
NET OPERATING INCOME	**$38,577.26**	**$0.00**	**$38,577.26**	**$ -38,577.26**	**0.00%**
NET INCOME	**$38,577.26**	**$0.00**	**$38,577.26**	**$ -38,577.26**	**0.00%**

SHERIDAN COUNTY MEMORIAL HOSPITAL FOUNDATION

Financial Statements

January 31, 2025 and 2024

MOHATT, JOHNSON & GODWIN, LLP

Certified Public Accountants

Everett J. Mohatt, CPA * Michael B. Johnson, CPA * Daniel R. Godwin, CPA * Tommy D. Davis, CPA

Laura J. Spiegel, CPA * Sarah J. Phillips, CPA * Roxanne P. Ostlund, CPA

SHERIDAN OFFICE
352 Whitney Lane – Suite 201
P.O. Box 603 Sheridan, WY 82801
307-672-6494 307-672-6814 fax

BUFFALO OFFICE
99 S. Main Street - Suite B
Buffalo, WY 82834
307-684-2997 307-684-2355 fax

ACCOUNTANTS' COMPILATION REPORT

To the Board of Directors
Sheridan County Memorial Hospital Foundation
Sheridan, WY 82801

Management is responsible for the accompanying financial statements of Sheridan County Memorial Hospital Foundation (a non-profit organization), which comprise the statements of assets, liabilities, and net assets—income tax basis as of January 31, 2025 and 2024, and the related statements of support, revenue and expenses—income tax basis for the one month and seven months then ended in accordance with the income tax basis of accounting, and for determining that the income tax basis of accounting is an acceptable financial reporting framework. We have performed a compilation engagement in accordance with Statements on Standards for Accounting and Review Services promulgated by the Accounting and Review Services Committee of the AICPA. We did not audit or review the financial statements nor were we required to perform any procedures to verify the accuracy or completeness of the information provided by management. We do not express an opinion, a conclusion, nor provide any form of assurance on these financial statements.

The financial statements are prepared in accordance with the income tax basis of accounting, which is a basis of accounting other than accounting principles generally accepted in the United States of America.

Management has elected to omit substantially all the disclosures and the statements of changes in net assets ordinarily included in financial statements prepared in accordance with the income tax basis of accounting. If the omitted disclosures and statements of changes in net assets were included in the financial statements, they might influence the user's conclusions about the Company's assets, liabilities, net assets, revenues, and expenses. Accordingly, the financial statements are not designed for those who are not informed about such matters.

We are not independent with respect to the Sheridan County Memorial Hospital Foundation.

The accompanying financial statements and our compilation report are for Sheridan County Memorial Hospital Foundation's board of directors and management only and should not be used or relied upon by any other party for any purpose. Additional users of these financial statements and compilation report are hereby advised that the liability of Mohatt, Johnson & Godwin, LLP to third party users who use or rely on this information may be limited pursuant to 1995 Wyo. Sess. Laws, Chapter 155 Creating Wyo. §33-3-201.

Mohatt, Johnson & Godwin, LLP
Sheridan, WY
February 13, 2025

Sheridan County Memorial Hospital Foundation

Statements of Assets, Liabilities, and Net Assets - Tax Basis

As of January 31, 2025

	TOTAL			
	AS OF JAN 31, 2025	AS OF JAN 31, 2024 (PY)	CHANGE	% CHANGE
ASSETS				
Current Assets				
Bank Accounts				
CD - HOSPICE - FFSB	0.00	250,000.00	-250,000.00	-100.00 %
CD - HOSPICE - FFSB - 2024	0.00	200,000.00	-200,000.00	-100.00 %
OPERATIONS CHKG #6721 18-FFSB	54,299.91	48,074.78	6,225.13	12.95 %
PROGRAM CHKG #03-930011-16	0.00	0.00	0.00	
TEMP RESTRICTED PROGRAM FUNDS				
Auxiliary Projects	70.00	-60.00	130.00	216.67 %
Cancer Center	0.00	0.00	0.00	
WCC Breast Boutique	0.00	0.00	0.00	
Navigation Support	1,073.07	0.00	1,073.07	
Total WCC Breast Boutique	**1,073.07**	**0.00**	**1,073.07**	
WCC General Donations	72,713.06	16,581.21	56,131.85	338.53 %
WCC Patient Comfort Care	226,941.20	240,805.43	-13,864.23	-5.76 %
Total Cancer Center	**300,727.33**	**257,386.64**	**43,340.69**	**16.84 %**
Cancer Screening	0.00	0.00	0.00	
Cancer Screening Early Detect	26,270.80	42,202.95	-15,932.15	-37.75 %
Total Cancer Screening	**26,270.80**	**42,202.95**	**-15,932.15**	**-37.75 %**
Cardiac Care	0.00	12,300.00	-12,300.00	-100.00 %
Clinical Ed Endowment Income	30,123.38	31,019.11	-895.73	-2.89 %
Clinical Education Endowment	5,100.00	0.00	5,100.00	
COVID-19 Fund	0.00	1,252.24	-1,252.24	-100.00 %
Diabetes Support	57,506.92	62,526.92	-5,020.00	-8.03 %
Dialysis Unit	0.00	0.00	0.00	
Bishop Dialysis Endowment Distr	23,412.44	0.00	23,412.44	
Dialysis General Donations	22,690.28	22,690.28	0.00	0.00 %
Total Dialysis Unit	**46,102.72**	**22,690.28**	**23,412.44**	**103.18 %**
Emergency Department	8,034.91	7,051.02	983.89	13.95 %
Equipment	0.00	69,045.00	-69,045.00	-100.00 %
GAP Program	47,904.01	46,821.43	1,082.58	2.31 %
Golf Tournament	6,800.00	13,514.29	-6,714.29	-49.68 %
Greenhouse				
June's Education Fund	10,700.00		10,700.00	
Total Greenhouse	**10,700.00**		**10,700.00**	
Growing For You				
Behavioral Health Phase	300,000.00		300,000.00	
Growing for You	32,716.38	2,688,686.86	-2,655,970.48	-98.78 %

Sheridan County Memorial Hospital Foundation

Statements of Assets, Liabilities, and Net Assets - Tax Basis

As of January 31, 2025

	TOTAL			
	AS OF JAN 31, 2025	AS OF JAN 31, 2024 (PY)	CHANGE	% CHANGE
Total Growing For You	**332,716.38**	**2,688,686.86**	**-2,355,970.48**	**-87.63 %**
Healthy Garden	2,403.11	3,094.04	-690.93	-22.33 %
Home Care	1,925.00	1,925.00	0.00	0.00 %
Hospice of The Big Horns	493,789.11	40,130.94	453,658.17	1,130.44 %
Husman Trust	641.65	0.00	641.65	
Husman Cardiology	6,408.00	0.00	6,408.00	
Total Husman Trust	**7,049.65**	**0.00**	**7,049.65**	
Pediatric Donations	7,650.04	6,650.04	1,000.00	15.04 %
Program Services Funds Approved - Awaiting Distribution	0.00	500,000.00	-500,000.00	-100.00 %
T.C.U.	38,422.90	30,178.43	8,244.47	27.32 %
The Link - Partners in Pink	4,800.00	5,290.00	-490.00	-9.26 %
Urgent Care	3,460.00	3,460.00	0.00	0.00 %
Wound Care Clinic	9,923.01	12,643.21	-2,720.20	-21.52 %
Total TEMP RESTRICTED PROGRAM FUNDS	**1,441,479.27**	**3,857,808.40**	**-2,416,329.13**	**-62.63 %**
UNRESTRICTED PROGRAM FUNDS	0.00	0.00	0.00	
Board Designated				
Partner Program	0.00	0.00	0.00	
2024 Partner Program	0.00	4,429.00	-4,429.00	-100.00 %
2025 Partner Program	4,011.00		4,011.00	
Total Partner Program	**4,011.00**	**4,429.00**	**-418.00**	**-9.44 %**
Total Board Designated	**4,011.00**	**4,429.00**	**-418.00**	**-9.44 %**
Membership Fund	117,074.13	144,867.93	-27,793.80	-19.19 %
TR Interest	76,736.55	151,002.97	-74,266.42	-49.18 %
Transfer for Operations	-371.01	-321.51	-49.50	-15.40 %
Unrestricted-Greatest Need	333,595.18	914,091.92	-580,496.74	-63.51 %
Total UNRESTRICTED PROGRAM FUNDS	**531,045.85**	**1,214,070.31**	**-683,024.46**	**-56.26 %**
Total PROGRAM CHKG #03-930011-16	**1,972,525.12**	**5,071,878.71**	**-3,099,353.59**	**-61.11 %**
Total Bank Accounts	**$2,026,825.03**	**$5,569,953.49**	**$-3,543,128.46**	**-63.61 %**
Total Current Assets	**$2,026,825.03**	**$5,569,953.49**	**$-3,543,128.46**	**-63.61 %**
Other Assets				
Allowance for Doubtful Accounts				
Pledge NPV Allowance	-277,253.00	-56,533.00	-220,720.00	-390.43 %
Total Allowance for Doubtful Accounts	**-277,253.00**	**-56,533.00**	**-220,720.00**	**-390.43 %**

Sheridan County Memorial Hospital Foundation

Statements of Assets, Liabilities, and Net Assets - Tax Basis

As of January 31, 2025

	TOTAL			
	AS OF JAN 31, 2025	AS OF JAN 31, 2024 (PY)	CHANGE	% CHANGE
DAD Bishop Dialysis Endowment	-46,552.82	-23,140.38	-23,412.44	-101.18 %
Bishop Endowment Income	-30,175.43	-47,541.23	17,365.80	36.53 %
Endowment Principal	366,485.49	366,485.49	0.00	0.00 %
Realized Gain (Loss)	234,027.13	211,094.97	22,932.16	10.86 %
Unrealized Gain (Loss)	95,577.81	60,869.97	34,707.84	57.02 %
Total DAD Bishop Dialysis Endowment	**619,362.18**	**567,768.82**	**51,593.36**	**9.09 %**
DAD Gifting Account	0.53	0.00	0.53	
Operating Income	0.00	0.20	-0.20	-100.00 %
Total DAD Gifting Account	**0.53**	**0.20**	**0.33**	**165.00 %**
DAD Lorraine S Husman Trust	1,517.97	1,517.97	0.00	0.00 %
DAD Husman Trust - Cardiac Care Principal	206,656.98	206,656.98	0.00	0.00 %
DAD Husman Trust - Dialysis Principal	3,841,090.72	3,841,090.72	0.00	0.00 %
DAD Husman Trust Income	-755,063.97	-883,313.03	128,249.06	14.52 %
Realized Gain (Loss)	1,646,170.94	1,516,623.70	129,547.24	8.54 %
Unrealized Gain (Loss)	1,519,749.88	827,492.00	692,257.88	83.66 %
Total DAD Lorraine S Husman Trust	**6,460,122.52**	**5,510,068.34**	**950,054.18**	**17.24 %**
DAD Nsg Educational Endowment	-65,017.67	-31,731.01	-33,286.66	-104.90 %
Realized Gain (Loss)	319,659.80	288,852.67	30,807.13	10.67 %
Scholarship Endowment Princ	101,325.00	101,325.00	0.00	0.00 %
CATO Scholarship Endowment	100,000.00	100,000.00	0.00	0.00 %
Scholarship Endowment General	449,176.30	449,176.30	0.00	0.00 %
Total Scholarship Endowment Princ	**650,501.30**	**650,501.30**	**0.00**	**0.00 %**
Scholarship Income	-100,647.86	-124,162.87	23,515.01	18.94 %
Unrealized Gain (Loss)	164,367.23	87,623.77	76,743.46	87.58 %
Total DAD Nsg Educational Endowment	**968,862.80**	**871,083.86**	**97,778.94**	**11.22 %**
FIB Investment Account	0.00	0.00	0.00	
FIB Investments - Other	2,047,471.05	1,862,869.81	184,601.24	9.91 %
Graham Endowment	100,000.00	100,000.00	0.00	0.00 %
Unrestricted Endowment	2,015.18	2,015.18	0.00	0.00 %
Total FIB Investment Account	**2,149,486.23**	**1,964,884.99**	**184,601.24**	**9.40 %**
FIB-Investment- Operating Fund	211,761.77	423,874.92	-212,113.15	-50.04 %
Operating Fund Income	686,962.18	647,760.62	39,201.56	6.05 %
Realized Gain (Loss)	63,059.27	-33,756.78	96,816.05	286.80 %
Unrealized Gain (Loss)	-19,604.50	-18,204.96	-1,399.54	-7.69 %
Total FIB-Investment- Operating Fund	**942,178.72**	**1,019,673.80**	**-77,495.08**	**-7.60 %**
Husman Trust - Other Assets				
Husman Mineral and Other Proper	7,759.00	7,759.00	0.00	0.00 %
Total Husman Trust - Other Assets	**7,759.00**	**7,759.00**	**0.00**	**0.00 %**
Minerals	10.00	10.00	0.00	0.00 %

Sheridan County Memorial Hospital Foundation

Statements of Assets, Liabilities, and Net Assets - Tax Basis

As of January 31, 2025

	TOTAL			
	AS OF JAN 31, 2025	AS OF JAN 31, 2024 (PY)	CHANGE	% CHANGE
Pledges Receivable				
Pldgs Rec - Golf Tournament	4,700.00	0.00	4,700.00	
Pldgs Rec - Growing for You	2,103,791.17	1,251,375.00	852,416.17	68.12 %
Pldgs Rec - Membership Fund	2,600.00	0.00	2,600.00	
Pldgs Rec - Transitional Care	69,578.00	764,242.95	-694,664.95	-90.90 %
Pldgs Rec - Unrestricted-Great	0.00	7,250.00	-7,250.00	-100.00 %
Pldgs Rec -The Link Partners	8,200.00	0.00	8,200.00	
Total Pledges Receivable	**2,188,869.17**	**2,022,867.95**	**166,001.22**	**8.21 %**
Total Other Assets	**$13,059,398.15**	**$11,907,583.96**	**$1,151,814.19**	**9.67 %**
TOTAL ASSETS	**$15,086,223.18**	**$17,477,537.45**	**$-2,391,314.27**	**-13.68 %**
LIABILITIES AND EQUITY				
Liabilities				
Total Liabilities			**$0.00**	**0.00%**
Equity				
Permanent Restricted Net Assets	1,115,452.00	1,079,961.00	35,491.00	3.29 %
Restricted Net Assets	10,722,488.00	8,172,972.00	2,549,516.00	31.19 %
Retained Earnings	0.00	3,446,563.08	-3,446,563.08	-100.00 %
Unrestricted Net Assets	4,597,863.33	3,376,057.73	1,221,805.60	36.19 %
Net Income	-1,349,580.15	1,401,983.64	-2,751,563.79	-196.26 %
Total Equity	**$15,086,223.18**	**$17,477,537.45**	**$-2,391,314.27**	**-13.68 %**
TOTAL LIABILITIES AND EQUITY	**$15,086,223.18**	**$17,477,537.45**	**$-2,391,314.27**	**-13.68 %**

Sheridan County Memorial Hospital Foundation

Statements of Support, Revenue & Expenses - Income Tax Basis

January 2025

	TOTAL			
	JAN 2025	JAN 2024 (PY)	CHANGE	% CHANGE
Income				
Budget Transfer Operating Funds				
Budgeted Operating Transfers	100,000.00	80,000.00	20,000.00	25.00 %
BudgetTransf Oprtn-Invest Fund	-100,000.00	-80,000.00	-20,000.00	-25.00 %
Total Budget Transfer Operating Funds	**0.00**	**0.00**	**0.00**	
DONATIONS - New Cash/New Pledge				
Donations - Auxilliary Projects	10.00		10.00	
Donations - GAP	10,005.00		10,005.00	
Donations - Golf Tournament	2,200.00		2,200.00	
Donations - Greenhouse	700.00		700.00	
Donations - Growing for You	19,815.00	140,020.00	-120,205.00	-85.85 %
Donations - Hospice		275.00	-275.00	-100.00 %
Donations - Husman Trust	155.15		155.15	
Donations - Membership Fund	4,000.00	6,650.00	-2,650.00	-39.85 %
Donations - Nursing Clinical Ed	5,100.00		5,100.00	
Donations - Partner Program	4,011.00	4,429.00	-418.00	-9.44 %
Donations - TCU		2,350.00	-2,350.00	-100.00 %
Donations - The Link	2,200.00		2,200.00	
Donations - Unrestricted Great	11,958.00	39,548.34	-27,590.34	-69.76 %
Donations - Welch Cancer Ctr	10,770.00	2,283.00	8,487.00	371.75 %
Donations - Wyoming Rehab				
Donations - Wound Care Clinic	250.00	500.00	-250.00	-50.00 %
Total Donations - Wyoming Rehab	**250.00**	**500.00**	**-250.00**	**-50.00 %**
Total DONATIONS - New Cash/New Pledge	**71,174.15**	**196,055.34**	**-124,881.19**	**-63.70 %**
INVESTMENT INCOME				
Dividends - DAD Husman TR Cardi	4,901.72	7,060.27	-2,158.55	-30.57 %
Dividends - FIB	997.99	1,496.94	-498.95	-33.33 %
Dividends - FIB Operating Fd	1,492.65	3,924.56	-2,431.91	-61.97 %
Dividends -Scholarship Fun	1,487.15	1,600.60	-113.45	-7.09 %
Dividends- Bishop Endowment	949.65	1,084.43	-134.78	-12.43 %
Interest - Bishop Endowment FF	5.51	8.92	-3.41	-38.23 %
Interest - DAD Husman TR - Card	61.24	87.40	-26.16	-29.93 %
Interest - DAD Husman TR Dialys		2.34	-2.34	-100.00 %
Interest - First Federal Saving	7,895.58	19,934.99	-12,039.41	-60.39 %
Interest - Scholarship	9.99	13.39	-3.40	-25.39 %
Interest Operational	268.19	230.66	37.53	16.27 %
Total INVESTMENT INCOME	**18,069.67**	**35,444.50**	**-17,374.83**	**-49.02 %**
1 **Total Income**	**$89,243.82**	**$231,499.84**	**$-142,256.02**	**-61.45 %**
GROSS PROFIT	**$89,243.82**	**$231,499.84**	**$-142,256.02**	**-61.45 %**

Sheridan County Memorial Hospital Foundation

Statements of Support, Revenue & Expenses - Income Tax Basis

January 2025

	TOTAL			
	JAN 2025	JAN 2024 (PY)	CHANGE	% CHANGE
Expenses				
FUND RAISING EXPENDITURES				
Annual Special Events				
The Link-Partners in Pink				
Advertising		200.00	-200.00	-100.00 %
Total The Link-Partners in Pink		**200.00**	**-200.00**	**-100.00 %**
Total Annual Special Events		**200.00**	**-200.00**	**-100.00 %**
Behavioral Health	855.97	319.95	536.02	167.53 %
TCU Campaign		1,646.50	-1,646.50	-100.00 %
3 **Total FUND RAISING EXPENDITURES**	**855.97**	**2,166.45**	**-1,310.48**	**-60.49 %**
MANAGEMENT & GENERAL OPERATIONS				
Advertising & Marketing		1,250.00	-1,250.00	-100.00 %
Credit Card Fees	268.36	321.51	-53.15	-16.53 %
Investment Service Fees				
Bishop Endowment Fd	747.34	703.26	44.08	6.27 %
DAD - Husman Trust - Cardiac	7,731.60	6,839.94	891.66	13.04 %
FIB - Investments	1,047.80	931.39	116.41	12.50 %
FIB - Opertaing Fund	494.93	501.74	-6.81	-1.36 %
Nursing Scholarship Endow	1,151.77	1,033.05	118.72	11.49 %
Total Investment Service Fees	**11,173.44**	**10,009.38**	**1,164.06**	**11.63 %**
Office Expenses	102.65		102.65	
Computer Support		978.27	-978.27	-100.00 %
Postage and Delivery	182.00	728.85	-546.85	-75.03 %
Printing and Reproduction	102.00		102.00	
Supplies/Other	201.28	359.74	-158.46	-44.05 %
Total Office Expenses	**587.93**	**2,066.86**	**-1,478.93**	**-71.55 %**
Professional Fees				
Dues	165.00	200.00	-35.00	-17.50 %
Total Professional Fees	**165.00**	**200.00**	**-35.00**	**-17.50 %**
Professional Fees for Services	30,588.02	29,765.90	822.12	2.76 %
Recognition Program				
Donor Recognition Expenses	278.27	424.15	-145.88	-34.39 %
Partner Program	2,905.04	1,987.79	917.25	46.14 %
Total Recognition Program	**3,183.31**	**2,411.94**	**771.37**	**31.98 %**
Volunteer Programs	619.64	60.00	559.64	932.73 %
4 **Total MANAGEMENT & GENERAL OPERATIONS**	**46,585.70**	**46,085.59**	**500.11**	**1.09 %**

Sheridan County Memorial Hospital Foundation

Statements of Support, Revenue & Expenses - Income Tax Basis

January 2025

	TOTAL			
	JAN 2025	JAN 2024 (PY)	CHANGE	% CHANGE
PROGRAM SERVICES EXPENDITURES				
Donation Expenditures				
Auxiliary Expenditures	265.00	1,095.00	-830.00	-75.80 %
Behavioral Health	150,000.00	17,090.01	132,909.99	777.71 %
Cancer Center				
CC General Donation Expenditure	4,595.90		4,595.90	
Total Cancer Center	**4,595.90**		**4,595.90**	
Cancer Screening Mamography Grt	2,158.11		2,158.11	
COVID-19		532.19	-532.19	-100.00 %
Dialysis Unit				
Bishop Endowment Distributions		46,636.18	-46,636.18	-100.00 %
Total Dialysis Unit		**46,636.18**	**-46,636.18**	**-100.00 %**
GAP		275.00	-275.00	-100.00 %
Nursing Clinical Education 7/06		-187.00	187.00	100.00 %
Nursing Scholarship Endowment	15,000.00		15,000.00	
TCU	350,000.00	324,336.18	25,663.82	7.91 %
Unrestricted Donations				
Special Projects		159,854.89	-159,854.89	-100.00 %
Total Unrestricted Donations		**159,854.89**	**-159,854.89**	**-100.00 %**
Total Donation Expenditures	**522,019.01**	**549,632.45**	**-27,613.44**	**-5.02 %**
MRI Equipment & Suite		2,000.00	-2,000.00	-100.00 %
5 **Total PROGRAM SERVICES EXPENDITURES**	**522,019.01**	**551,632.45**	**-29,613.44**	**-5.37 %**
Total Expenses	**$569,460.68**	**$599,884.49**	**$-30,423.81**	**-5.07 %**
NET OPERATING INCOME	**$-480,216.86**	**$-368,384.65**	**$-111,832.21**	**-30.36 %**
Other Income				
Other Investment Income				
Bishop Endowment Fd				
Unrealized Gains/Losses	12,982.12	1,682.03	11,300.09	671.81 %
Total Bishop Endowment Fd	**12,982.12**	**1,682.03**	**11,300.09**	**671.81 %**
DAD - Husman Trust -Cardiac				
Unrealized Gains/Losses	191,707.94	5,132.67	186,575.27	3,635.05 %
Total DAD - Husman Trust -Cardiac	**191,707.94**	**5,132.67**	**186,575.27**	**3,635.05 %**
FIB - Investment Account				
Realized Gains/Losses	66,920.11		66,920.11	
Unrealized Gains/Losses	-5,458.67	-12,713.15	7,254.48	57.06 %
Total FIB - Investment Account	**61,461.44**	**-12,713.15**	**74,174.59**	**583.45 %**
FIB - Operating Fund Investment				
Realized Gains/Losses	-5,242.79		-5,242.79	
Unrealized Gains/Losses	9,585.37	747.03	8,838.34	1,183.13 %
Total FIB - Operating Fund Investment	**4,342.58**	**747.03**	**3,595.55**	**481.31 %**

Sheridan County Memorial Hospital Foundation

Statements of Support, Revenue & Expenses - Income Tax Basis

January 2025

	TOTAL			
	JAN 2025	JAN 2024 (PY)	CHANGE	% CHANGE
Nursing Educational Endow				
Unrealized Gains/Losses	34,301.82 ✓	2,496.70	31,805.12	1,273.89 %
Total Nursing Educational Endow	**34,301.82**	**2,496.70**	**31,805.12**	**1,273.89 %**
6 **Total Other Investment Income**	**304,795.90**	**-2,654.72**	**307,450.62**	**11,581.28 %**
Total Other Income	**$304,795.90**	**$-2,654.72**	**$307,450.62**	**11,581.28 %**
NET OTHER INCOME	**$304,795.90**	**$-2,654.72**	**$307,450.62**	**11,581.28 %**
NET INCOME	**$-175,420.96**	**$-371,039.37**	**$195,618.41**	**52.72 %**

Sheridan County Memorial Hospital Foundation

Statements of Support, Revenue & Expenses - Income Tax Basis

July 2024 - January 2025

	TOTAL			
	JUL 2024 - JAN 2025	JUL 2023 - JAN 2024 (PY YTD)	% OF ROW	% OF COLUMN
Income				
Budget Transfer Operating Funds				
Budgeted Operating Transfers	280,000.00	240,000.00	100.00 %	-20.75 %
BudgetTransf Oprtn-Invest Fund	-280,000.00	-240,000.00	100.00 %	20.75 %
Total Budget Transfer Operating Funds	**0.00**	**0.00**		**0.00 %**
DONATIONS - New Cash/New Pledge				
Donations - Auxilliary Projects	725.00	1,485.00	100.00 %	-0.05 %
Donations - Cardiac Care		300.00		
Donations - Emergency Dept	1,000.00		100.00 %	-0.07 %
Donations - Equipment		675,676.00		
Donations - GAP	10,533.72	5,116.00	100.00 %	-0.78 %
Donations - Golf Tournament	9,500.00	10,033.34	100.00 %	-0.70 %
Donations - Greenhouse	10,700.00		100.00 %	-0.79 %
Donations - Growing for You	1,247,041.97	1,450,984.12	100.00 %	-92.40 %
Donations - Hospice	5,070.00	4,720.00	100.00 %	-0.38 %
Donations - Husman Trust	387.60	432.47	100.00 %	-0.03 %
Donations - Membership Fund	19,800.00	28,483.35	100.00 %	-1.47 %
Donations - Nrsing Schlrsip End		15,000.00		
Donations - Nursing Clinical Ed	20,100.00	100.00	100.00 %	-1.49 %
Donations - Partner Program	29,406.00	30,969.00	100.00 %	-2.18 %
Donations - TCU	0.00	12,472.62		0.00 %
Donations - The Link	60,301.61	55,371.97	100.00 %	-4.47 %
Donations - Transitional Care	0.00			0.00 %
Donations - Unrestricted Great	200,601.83	388,250.65	100.00 %	-14.86 %
Donations - Welch Cancer Ctr	33,510.00	23,988.00	100.00 %	-2.48 %
Donations - Wyoming Rehab				
Donations - Wound Care Clinic	250.00	500.00	100.00 %	-0.02 %
Total Donations - Wyoming Rehab	**250.00**	**500.00**	**100.00 %**	**-0.02 %**
Total DONATIONS - New Cash/New Pledge	**1,648,927.73**	**2,703,882.52**	**100.00 %**	**-122.18 %**
INVESTMENT INCOME				
Dividends - DAD Husman TR Cardi	83,824.82	45,410.06	100.00 %	-6.21 %
Dividends - DAD Husman TR Dialy		40,789.76		
Dividends - FIB	35,761.45	41,814.35	100.00 %	-2.65 %
Dividends - FIB Operating Fd	24,980.53	26,225.43	100.00 %	-1.85 %

Sheridan County Memorial Hospital Foundation

Statements of Support, Revenue & Expenses - Income Tax Basis

July 2024 - January 2025

	TOTAL			
	JUL 2024 - JAN 2025	JUL 2023 - JAN 2024 (PY YTD)	% OF ROW	% OF COLUMN
Dividends -Scholarship Fun	17,306.75	16,069.59	100.00 %	-1.28 %
Dividends- Bishop Endowment	11,233.83	10,934.07	100.00 %	-0.83 %
Interest - Bishop Endowment FF	50.85	62.78	100.00 %	-0.00 %
Interest - DAD Gifting	142.92		100.00 %	-0.01 %
Interest - DAD Husman TR - Card	572.76	197.38	100.00 %	-0.04 %
Interest - DAD Husman TR Dialys		464.88		
Interest - First Federal Saving	81,582.57	133,316.24	100.00 %	-6.05 %
Interest - Scholarship	84.91	85.06	100.00 %	-0.01 %
Interest Operational	1,837.96	3,076.84	100.00 %	-0.14 %
Other Invest ment Income		6.72		
Total INVESTMENT INCOME	**257,379.35**	**318,453.16**	**100.00 %**	**-19.07 %**
Total Income	**$1,906,307.08**	**$3,022,335.68**	**100.00 %**	**-141.25 %**
GROSS PROFIT	**$1,906,307.08**	**$3,022,335.68**	**100.00 %**	**-141.25 %**
Expenses				
FUND RAISING EXPENDITURES				
Annual Special Events				
Foundation Benefit				
Spring Benefit				
Food	250.00		100.00 %	-0.02 %
Total Spring Benefit	**250.00**		**100.00 %**	**-0.02 %**
Total Foundation Benefit	**250.00**		**100.00 %**	**-0.02 %**
Golf Tournament	186.13	16,740.70	100.00 %	-0.01 %
The Link-Partners in Pink	3,300.00	437.05	100.00 %	-0.24 %
Advertising	4,280.25	2,102.00	100.00 %	-0.32 %
Decorations	338.61	8.47	100.00 %	-0.03 %
Food	530.08	104.61	100.00 %	-0.04 %
Participant Gear & Concession	6,795.10	11,515.66	100.00 %	-0.50 %
Postage & Delivery	528.96	549.12	100.00 %	-0.04 %
Printing	1,900.39	1,661.00	100.00 %	-0.14 %
The Link - Race Support	3,286.23	3,565.19	100.00 %	-0.24 %
Total The Link-Partners in Pink	**20,959.62**	**19,943.10**	**100.00 %**	**-1.55 %**
Total Annual Special Events	**21,395.75**	**36,683.80**	**100.00 %**	**-1.59 %**
Behavioral Health	13,153.43	755.48	100.00 %	-0.97 %
TCU Campaign		1,646.50		
Total FUND RAISING EXPENDITURES	**34,549.18**	**39,085.78**	**100.00 %**	**-2.56 %**

Sheridan County Memorial Hospital Foundation

Statements of Support, Revenue & Expenses - Income Tax Basis

July 2024 - January 2025

	TOTAL			
	JUL 2024 - JAN 2025	JUL 2023 - JAN 2024 (PY YTD)	% OF ROW	% OF COLUMN
MANAGEMENT & GENERAL OPERATIONS	0.00			0.00 %
Accounting	3,300.00	4,300.00	100.00 %	-0.24 %
Advertising & Marketing	1,635.00	1,635.00	100.00 %	-0.12 %
Bank Service Charges	7.00		100.00 %	-0.00 %
Credit Card Fees	1,231.13	891.88	100.00 %	-0.09 %
Insurance	800.00	800.00	100.00 %	-0.06 %
Investment Service Fees				
Bishop Endowment Fd	2,268.94	2,063.07	100.00 %	-0.17 %
DAD - Husman TR - Dialysis		7,250.21		
DAD - Husman Trust - Cardiac	23,048.99	8,353.58	100.00 %	-1.71 %
FIB - Investments	7,104.52	6,927.18	100.00 %	-0.53 %
FIB - Opertaing Fund	2,487.16	3,205.06	100.00 %	-0.18 %
Nursing Scholarship Endow	3,491.12	3,027.72	100.00 %	-0.26 %
Total Investment Service Fees	**38,400.73**	**30,826.82**	**100.00 %**	**-2.85 %**
Office Expenses	102.65		100.00 %	-0.01 %
Computer Support	16,737.29	16,424.30	100.00 %	-1.24 %
Postage and Delivery	1,773.55	3,656.84	100.00 %	-0.13 %
Printing and Reproduction	474.80	5,012.03	100.00 %	-0.04 %
Supplies/Other	2,188.48	1,557.61	100.00 %	-0.16 %
Total Office Expenses	**21,276.77**	**26,650.78**	**100.00 %**	**-1.58 %**
Professional Fees		125.00		
Dues	1,172.25	597.00	100.00 %	-0.09 %
Education/Seminars	2,082.45	5,039.98	100.00 %	-0.15 %
Legal Fees	625.00	2,120.00	100.00 %	-0.05 %
Total Professional Fees	**3,879.70**	**7,881.98**	**100.00 %**	**-0.29 %**
Professional Fees for Services	197,377.39	167,398.45	100.00 %	-14.63 %
Recognition Program				
Donor Recognition Expenses	2,633.52	2,707.09	100.00 %	-0.20 %
Partner Program	6,285.21	3,383.15	100.00 %	-0.47 %
Special Events		473.30		
Annual Meeting	380.50	0.00	100.00 %	-0.03 %
Total Special Events	**380.50**	**473.30**	**100.00 %**	**-0.03 %**
Total Recognition Program	**9,299.23**	**6,563.54**	**100.00 %**	**-0.69 %**
Travel Expenses	1,809.41		100.00 %	-0.13 %
Volunteer Programs	807.11	1,197.50	100.00 %	-0.06 %
Total MANAGEMENT & GENERAL OPERATIONS	**279,823.47**	**248,145.95**	**100.00 %**	**-20.73 %**

Sheridan County Memorial Hospital Foundation

Statements of Support, Revenue & Expenses - Income Tax Basis

July 2024 - January 2025

	TOTAL			
	JUL 2024 - JAN 2025	JUL 2023 - JAN 2024 (PY YTD)	% OF ROW	% OF COLUMN
PROGRAM SERVICES EXPENDITURES				
Donation Expenditures				
Auxiliary Expenditures	715.00	3,434.50	100.00 %	-0.05 %
Behavioral Health	2,420,738.15	58,224.44	100.00 %	-179.37 %
Cancer Center	20,094.00	2,445.74	100.00 %	-1.49 %
CC General Donation Expenditure	71,063.14	5,000.00	100.00 %	-5.27 %
Total Cancer Center	**91,157.14**	**7,445.74**	**100.00 %**	**-6.75 %**
Cancer Screening Mamography Grt	5,587.60	723.47	100.00 %	-0.41 %
COVID-19		1,372.08		
Diabetes Education & Support	3,321.00		100.00 %	-0.25 %
Dialysis Unit				
Bishop Endowment Distributions		46,636.18		
Total Dialysis Unit		**46,636.18**		
Donation Exp - Patient Care		798.00		
Emergency Department		0.00		
GAP	8,000.00	5,595.29	100.00 %	-0.59 %
Hospice	23,329.31	5,588.22	100.00 %	-1.73 %
Nursing Clinical Education 7/06	39,280.84	50,422.80	100.00 %	-2.91 %
Nursing Scholarship Endowment	19,013.00	-18,388.78	100.00 %	-1.41 %
Pulmonary Rehab	61,493.80		100.00 %	-4.56 %
TCU	462,000.00	404,336.18	100.00 %	-34.23 %
Unrestricted Donations	31.50		100.00 %	-0.00 %
Equipment		550,400.00		
Special Projects	499,084.97	620,326.12	100.00 %	-36.98 %
Total Unrestricted Donations	**499,116.47**	**1,170,726.12**	**100.00 %**	**-36.98 %**
Wound Care	2,970.20		100.00 %	-0.22 %
Total Donation Expenditures	**3,636,722.51**	**1,736,914.24**	**100.00 %**	**-269.47 %**
MRI Equipment & Suite		2,000.00		
Total PROGRAM SERVICES EXPENDITURES	**3,636,722.51**	**1,738,914.24**	**100.00 %**	**-269.47 %**
Total Expenses	**$3,951,095.16**	**$2,026,145.97**	**100.00 %**	**-292.76 %**
NET OPERATING INCOME	**$ -2,044,788.08**	**$996,189.71**	**100.00 %**	**151.51 %**
Other Income				
Other Investment Income				
Bishop Endowment Fd				
Realized Gains/Losses	20,657.80	9,948.40	100.00 %	-1.53 %
Unrealized Gains/Losses	11,919.63	15,218.33	100.00 %	-0.88 %
Total Bishop Endowment Fd	**32,577.43**	**25,166.73**	**100.00 %**	**-2.41 %**

Sheridan County Memorial Hospital Foundation

Statements of Support, Revenue & Expenses - Income Tax Basis

July 2024 - January 2025

	TOTAL			
	JUL 2024 - JAN 2025	JUL 2023 - JAN 2024 (PY YTD)	% OF ROW	% OF COLUMN
DAD - Husman - Dialysis				
Realized Gain (Loss) - Dialysis		105,654.51		
Unrealized Gain (Loss)		-53,216.31		
Total DAD - Husman - Dialysis		**52,438.20**		
DAD - Husman Trust -Cardiac				
Realized Gains/Losses	129,125.65	29,618.85	100.00 %	-9.57 %
Unrealized Gains/Losses	350,487.04	163,844.79	100.00 %	-25.97 %
Total DAD - Husman Trust -Cardiac	**479,612.69**	**193,463.64**	**100.00 %**	**-35.54 %**
FIB - Investment Account				
Realized Gains/Losses	85,485.28	157,224.66	100.00 %	-6.33 %
Unrealized Gains/Losses	30,929.12	-70,094.76	100.00 %	-2.29 %
Total FIB - Investment Account	**116,414.40**	**87,129.90**	**100.00 %**	**-8.63 %**
FIB - Operating Fund Investment	-2,113.15		100.00 %	0.16 %
Realized Gains/Losses	-5,242.79	-15,512.28	100.00 %	0.39 %
Unrealized Gains/Losses	8,967.36	26,157.53	100.00 %	-0.66 %
Total FIB - Operating Fund Investment	**1,611.42**	**10,645.25**	**100.00 %**	**-0.12 %**
Nursing Educational Endow				
Realized Gains/Losses	27,818.52	12,751.80	100.00 %	-2.06 %
Unrealized Gains/Losses	37,517.50	24,198.41	100.00 %	-2.78 %
Total Nursing Educational Endow	**65,336.02**	**36,950.21**	**100.00 %**	**-4.84 %**
Realized Gain/Loss - Stock Gift	-344.03		100.00 %	0.03 %
Unrealized Gain/Loss Gifting Account	0.00			0.00 %
Total Other Investment Income	**695,207.93**	**405,793.93**	**100.00 %**	**-51.51 %**
Total Other Income	**$695,207.93**	**$405,793.93**	**100.00 %**	**-51.51 %**
NET OTHER INCOME	**$695,207.93**	**$405,793.93**	**100.00 %**	**-51.51 %**
NET INCOME	**$-1,349,580.15**	**$1,401,983.64**	**100.00 %**	**100.00 %**

Note
For the seven months ended 01/31/2025 and 2024